950M/962M

Wheel Loaders

	950M	962M
Engine Model	Cat® C7.1 ACERT™	Cat C7.1 ACERT
Maximum Power – ISO 14396	186 kW (253 hp metric)	201 kW (273 hp metric)
Maximum Net Power – ISO 9249	171 kW (232 hp metric)	186 kW (253 hp metric)
Bucket Capacities	2.5-9.2 m^3	2.5-9.9 m^3
Operating Weight	19 269 kg (3.3 m^3 MH BOCE bucket)	20 296 kg (3.6 m^3 MH BOCE bucket)

RELIABLE, PRODUCTIVE AND FUEL EFFICIENT

- *10% more fuel efficient than the industry leading K Series**
- *Up to 25% more fuel efficient than H Series**
- ***Optimized Z-bar Linkage** provides optimal visibility, performance and fuel efficiency*
- ***Performance Series buckets** are easy to load and improve material retention*
- ***Cat Fusion™ coupler system and work tools** provide a wide range of work tools and allow the same work tool on different sizes of wheel loaders*
- ***Cat engine with ACERT Technology** which meets EU Stage IV emission standards and includes Cat Clean Emissions Module for continuous and efficient operation*
- ***Advanced powershift transmission** with a standard lock up clutch torque converter and lock-to-lock shifting delivers smooth shifts, fast acceleration and speed on grade*
- ***Next generation axle** with standard on-the-go disc-type front manual differential locks to provide optimal traction in varying underfoot conditions for improved productivity*
- ***Next generation load-sensing hydraulic system** to provide optimal control of machine functions*

EASE OF OPERATION

- ***Best-in-class operator environment** for unmatched operator comfort and efficiency*
- ***Advanced technology with Cat Connect** to monitor, manage and enhance job site operations*

SERVICE ACCESS

- *Legacy one-piece hood, centralized service centers, windshield cleaning platform and harness tie-off to provide the best in class service access*

Contents

Reliable 4
Durable 5
Productive 6
Fuel Efficient 7
Easy to Operate 8
Versatile 10
Integrated Technologies 12
Owning Costs 14
Operating Costs 15
Serviceable 16
Sustainable 17
Customer Support 17
Specifications 18
Standard Equipment 32
Optional Equipment 33
Notes 34

**Fuel efficiency is measured in mass of material moved per volume of fuel burned. Average efficiency improvement as tested and analyzed for an average composite cycle and standard configuration with variations per comparable model with and without Economy Mode active. Factors influence result variation such as, but not limited to, machine configuration, operator technique, machine application, climate, etc.*

The new 950M and 962M Wheel Loaders have a Stage IV ACERT engine equipped with a combination of proven electronic, fuel, air and aftertreatment components. Applying proven technologies systematically and strategically lets us meet our customer's high expectations for productivity and fuel efficiency. Deep system integration results in reduced emissions, improved performance and improved fuel economy without interrupting machine performance making it seamless to operators. The reliability, durability, and versatility of both the 950M and 962M result in machines that are better built to meet your needs.

Reliable

Proven Components and Technology You Can Count On.

Every Stage IV ACERT engine is equipped with a combination of proven electronic, fuel, air and aftertreatment components.

More Powerful, Reliable Engine Electronics

The electronics used in Cat Stage IV engines are more powerful and robust than ever. Increased features and connection commonality improve the customer experience and increase quality and reliability. Over-foam wiring harness adds to reliability even in the most demanding applications.

Hydraulics

The 950M and 962M hydraulic systems have significant design changes and customer value improvements. The main hydraulic valve is now a mono-block with an integrated ride control section. The mono-block design reduces weight, has forty percent fewer leak points and is common across all M Series models. Auxiliary third and fourth hydraulic functions can be easily added at the factory or in the field with the addition of a second remote valve.

Equipment Monitoring

Cat Connect technologies and Cat dealer services take the guesswork out of equipment management. Product Link™ and the online VisionLink® application enable you to monitor real-time machine data and manage machines health. Your Cat dealer offers expert advice and S·O·S℠ Services to maintain equipment reliability and efficiency.

Cold Start Package

The new optional cold start package provides dependable starts in extreme cold weather and high altitudes.

Durable

Better Built to Meet Your Needs.

Frames

The robotically welded two-piece structural frame design provides strong and rigid structures that absorb all the forces associated to penetration, loading and twisting.

The M Series articulating hitch system, joining the front and rear frames, provides increased bearing force capacity.

Axles

The M Series axles are designed to handle extreme applications resulting in reliable performance and durable life. The rear axle can oscillate to ±13 degrees helping to ensure all four wheels stay on the ground providing stability even in the roughest terrain, for excellent stability and traction.

Productive
Work Smart and Move More.

The right technologies fine-tuned for the right applications result in:

- **High Performance** across a variety of applications.
- **Enhanced Reliability** through commonality and simplicity of design.
- **Maximized Uptime and Reduced Cost** with world-class support from the Cat dealer network.
- **Minimized Impact of Emission Systems** – Designed to be transparent to the operator without requiring interaction.
- **Durable Designs** with long life to overhaul.
- **Delivering Better Fuel Economy** with minimized maintenance costs while providing the same great power and response.

Hydraulics

The new ride control system now has two accumulators enabling it to be more effective over a greater payload range, increasing productivity and operator efficiency due to a better ride.

The next generation implement pump continuously and automatically balance hydraulic loads with the machine performance desired by the operator. Engine response is improved as is performance at higher altitudes.

Transmission

The 950M and 962M power trains have been improved with the addition of a 5 speed transmission which includes a lock up clutch torque converter standard. These new torque converters have been matched with the engine power and hydraulics to improve performance and fuel efficiency. These rugged countershaft transmissions also have a new split-flow oil system which use new multi-viscosity oil to improve fuel economy.

Axles

The new on-the-go disc-type differential locks will improve tractive ability in these applications thereby increasing productivity. These models come standard with front axle differential locks which can be manually activated by a switch on the floor without having to stop the machine. Optional fully automatic front and rear axle differential locks require no operator intervention to activate: they automatically engage when the machine is digging or when a difference in wheel speeds is measured. These disc-type differential locks will reduce tire scuffing compared to other traction aids further reducing operating costs for customers.

The axles have new external caliper disc parking brakes mounted to the input shaft of the front axles. Since they are external, they do not have the inefficiencies of enclosed wet parking brakes due to brake discs running in oil nor is there any oil to change reducing fuel and maintenance costs. External caliper parking brakes are easily accessible for inspection and service.

Fuel Efficient

Engineered to Lower Your Operating Costs.

Engine and Emissions

The Cat C7.1 ACERT engine is designed for maximum fuel efficiency and increased power density, while meeting Stage IV emission standards. This engine features innovative Cat electronics, fuel injection process, air-management systems, aftertreatment solution with Cat Selective Catalytic Reduction, and a fuel efficient regeneration system. The Cat Regeneration System automatically removes soot from the Diesel Particulate Filter without interrupting your machine's work cycle.

Efficient Systems and Components

Innovative systems intelligently lower the average working engine speeds and reduce the overall system heat loads which result in significantly improved performance and fuel efficiency.

Advanced Systems with Innovative Integration

The deep system integration of the new engine and emissions system, power train, hydraulic system and cooling system result in lower fuel consumption on average compared to the 950K and 962K.

Economy Mode

The productive economy mode automatically controls the engine torque and speed based on the machine's power train load and places engine speed and torque in the most efficient operating range. The result is improved fuel efficiency while delivering optimal performance.

Next Generation Fuel Systems

Cat injection timing precisely controls the fuel injection process through a series of carefully timed microbursts, providing more control of combustion for the cleanest, most efficient fuel burn. On 950M and 962M the high pressure common rail fuel systems boost performance and reduce soot for the C7.1 ACERT engine.

Cat NO_X Reduction System

The Cat NO_X Reduction System (NRS) captures and cools a small quantity of exhaust gas, then routes it back into the combustion chamber where it drives down combustion temperatures and reduces NO_X emissions.

Aftertreatment Technologies

To meet the additional 80% reduction in NO_X emissions required by Stage IV emission standards, one new system, the Selective Catalytic Reduction (SCR), has been added to the already proven Cat Stage IIIB aftertreatment solution.

Easy to Operate
Safe. Comfortable. Efficient.

Improving operator efficiency remains a key design goal for the 950M and 962M. Ensuring operators are safe, confident in the control of their machines, have a clean, comfortable and quiet operating environment with controls that are intuitive and low effort all contribute to lower operator fatigue and better performance.

Cab Access

A switch has been added to the electronic service center which unlatches the door remotely (optional). The gas strut then swings the door open all while the operator is safely on the ground. The angle of the steps up to the cab have been increased to an optimal fifteen degrees enabling operators to walk up like stairs versus climbing more vertically like a ladder. Grab handles have been repositioned so a secure three points of contact can be maintained at all times.

Visibility

Once in the cab, the new door securely seals against the new roll formed ROPS posts and the lower glass panel has been extended several inches to improve visibility to the left side of the machine. New larger convex mirrors improve visibility to the rear and integrated spot mirrors provide visibility close to both sides of the machine.

Sound

Viscous cab mounts connect the cab to the frame of the machine, decreasing noise and vibration the operator is subjected to. The result is a sustainable work environment and well-rested operator, remaining efficient and productive.

Central Display

The central display panel has a large text box, five analog gauges, and LED warning indicators. The large text box provides in-language information about machine operation, feature activation and system troubleshooting and calibration. With the five large analog gauges the operator can easily identify if key systems are within normal operating range.

Touch Screen Display

A new multipurpose color touch screen display dramatically simplifies the operator interface; with machine controls, rear vision camera and new fully integrated Cat Production Measurement system. Intuitive navigation with in-language text enables operators to modify certain machine operating parameters and monitor machine conditions literally at the touch of their fingers.

Control Panel

Sealed against moisture and dirt, the centralized switch panel with LEDs provides reliability and ready access to frequently required functions, even while wearing gloves. The ISO symbols located on each membrane switch are molded all the way through to ensure the image will not wear off over time.

The M Series maintains the “help” feature which explains the function of each membrane switch.

Focusing on operator efficiency, the control panel has been streamlined to include easy to reach highly utilized machine controls. The touch screen display enables the relocation of some expanded functions while eliminating the need for a second switch panel for further simplicity and easy machine operation.

Conventional Steering

The conventional steering configuration on these machines offers a low-effort hand metering unit hydraulic steering system. Load sensing steering directs power through the steering system only when needed.

Optional Electro-Hydraulic (EH) Joystick Steering with Force Feedback (Speed Sensitive)

Your operators will enjoy and quickly adopt the industry leading seat mounted EH joystick steering system, which provides precision control and dramatically decrease operator arm fatigue.

Implement Controls (EH)

Seat mounted single axis implement control levers or joystick provide your operator with precise control of the work tool, all while moving with the seat for maximum comfort. In-cab programmable kick-outs and automatic cylinder snubbing are easy to set on-the-go for tilt, lower and lift, ideal for repeatable cycles.

Ride Control

The next generation of ride control works as a shock absorber, improving ride quality and smoothness over rough terrain, increasing your operator confidence, comfort and efficiency, ensuring excellent material retention.

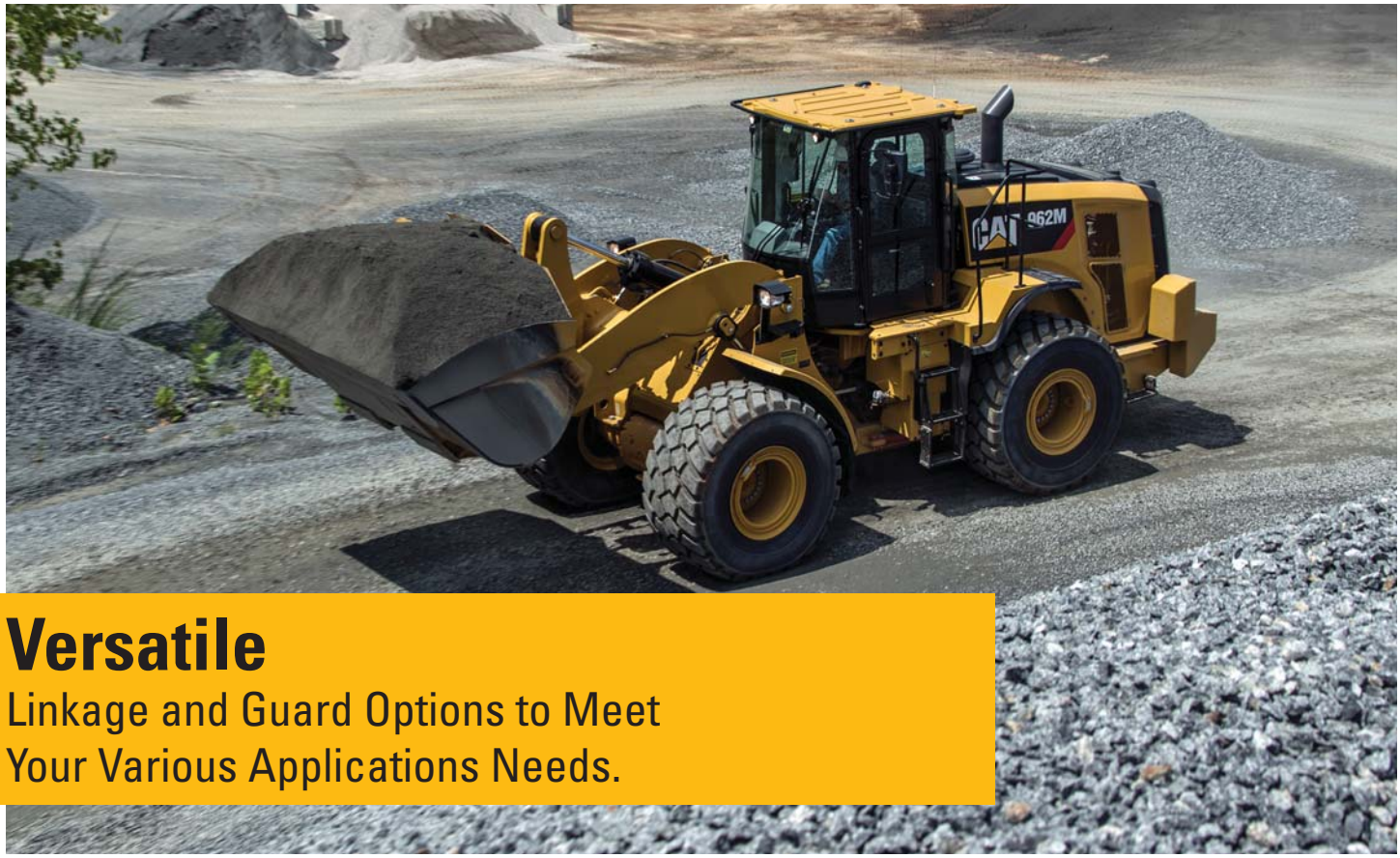

Versatile

Linkage and Guard Options to Meet Your Various Applications Needs.

Work Tool Control System

The work tool control system facilitates the use of different work tools. The operator has only to select the desired tool and the machine automatically adapts the hydraulic and kick out settings defined for this tool.

Optimized Z-bar Linkage

Development of the optimized Z-bar linkage was done in conjunction with the Performance Series Buckets, Fusion coupler and Fusion family of work tools to ensure that all components function together to optimize visibility, performance and fuel efficiency. Parallel lift capabilities, high breakout forces and high tilt forces at maximum lift enhance performance and versatility.

High Lift Linkage

The optional high lift linkage offers increased hinge pin height to load more easily in a variety of applications with any type of bucket or fork.

Aggregate Handler

Aggregate packages are specialized offerings for specific loose aggregate rehandling applications, such as truck loading, hopper charging, stockpiling, and load and carry. Rehandling loose aggregate is less stressful on the machine, therefore payloads can be increased above other applications by installing larger buckets, counterweights.

To do so, the Cat aggregate packages require conformance to Caterpillar payload policy. Misapplication of Aggregate Handlers may result in significant reliability and durability risk.

Industrial and Waste Handler

The Industrial and Waste Packages offer integrated guards to preserve your machine from the harsh environment of a scrap or waste handling application. The machine guarding is purpose built to protect your machine's major components and systems to ensure durability and reliability.

Forestry Arrangement

The Forestry package includes larger lift and tilt cylinders, and a heavier counterweight to safely handle the larger loads met in logging and millyard applications.

Versatile

Do More Jobs with One Machine, Fusion Quick Coupler and Various Work Tools.

An extensive range of work tools and bucket styles are available to customize these machines for your operation. Work tools are available either with pin on or quick coupler interface.

Performance Series Buckets

- **Load Easy, Fuel Efficient, Carry More** – Performance Series Buckets utilize a system-based approach to balance bucket shape with the machine's linkage, weight, lift and tilt capacities. Operators benefit from reduced dig times and better material retention; ultimately translating into significant productivity and fuel efficiency improvements.
- **Lower Operating Costs** – Performance Series Buckets feature a longer floor that easily digs through the pile and provides excellent visibility for the operators to see when the bucket is full. Less time digging in the pile results in lower fuel consumption and improved tire life. A unique spill guard protects the cab and linkage components from material overflow.
- **Higher Productivity** – Performance Series Buckets achieve higher fill factors – ranging from 100% to 115% depending on the machine application and material type. The buckets feature a curved side profile to maximize material retention. The optimized design results in unsurpassed production capabilities.

Fusion Quick Coupler

Improved Machine Performance

Fusion is the patented wheel loader coupler system from Caterpillar. The Fusion Coupler System provides performance virtually identical to pin on – with all the flexibility of a quick coupler system. The Fusion Coupler sits back, close in to the loader arms – minimizing offset and increasing the machine's performance.

No Loss of Performance

Fusion is designed to integrate the work tool and the machine by pulling the coupler and tool closer in to the loader. As a result, the center of gravity is moved inward, towards the machine. This translates to increased lifting ability when compared to machines equipped with other coupler systems.

Unsurpassed Durability

An advanced wedging mechanism creates a tight, rattle-free fit. This patented lock up system eliminates play and wear – resulting in a long service life.

Increased Visibility

A new, open coupler frame design clears sight lines from the operator's seat, making it easier than ever before to engage and disengage attachments with certainty.

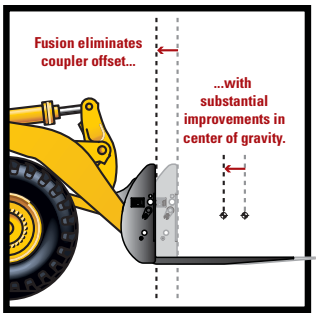

Common Interface Compatibility

The Fusion Coupler System not only allows one machine to use a range of work tools, but also allows one work tool to be picked up by machines of many different sizes.

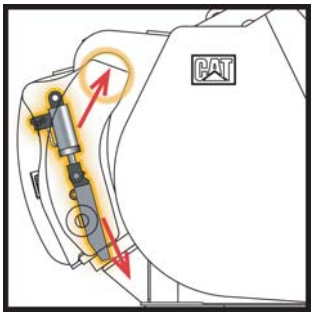

Integrated Technologies

Monitor, Manage, and Enhance Job Site Operations.

Cat Connect makes smart use of technology and services to improve your job site efficiency. Using the data from technology-equipped machines, you'll get more information and insight into your equipment and operations than ever before.

Cat Connect technologies offer improvements in these key areas:

EQUIPMENT MANAGEMENT

Equipment Management – increase uptime and reduce operating costs.

PRODUCTIVITY

Productivity – monitor production and manage job site efficiency.

SAFETY

Safety – enhance job site awareness to keep your people and equipment safe.

LINK Technologies

LINK technologies wirelessly connect you to your equipment giving you access to essential information you need to know to run your business. Link data can give you valuable insight into how your machine or fleet is performing so you can make timely, fact-based decisions that can boost job site efficiency and productivity.

Product Link/VisionLink

Product Link is deeply integrated into your machine to take the guesswork out of equipment management. Easy access to timely information like machine location, hours, fuel usage, idle time and event codes via the online VisionLink user interface can help you effectively manage your fleet and lower operating cost.

PAYLOAD Technologies

PAYLOAD technologies provide accurate weighing of materials being loaded and hauled. Payload data is displayed for loader operators in real-time to improve productivity, reduce overloading, and recorded to track material movement by shift.

- **Cat Production Measurement** – Cat Production Measurement brings payload weighing to the cab, enabling operators to weigh loads "on-the-go" during loading operations. Loads are weighed as the bucket is raised during the lift cycle – eliminating the need to interrupt the load cycle, improving loading efficiency. Operators can view load weights on the integrated multi-function display and know precisely how much material is in the bucket and when trucks are filled to target payload – before leaving the loading zone. Instant feedback gives operators the confidence to work more effectively, maximizing the potential of the entire fleet. An optional in-cab printer provides the driver a printed receipt of truck payloads.
  Operators can track recorded weights and cycles using the display. Site managers can wirelessly access data via the VisionLink web portal to measure production and monitor efficiency.

DETECT Technologies

DETECT technologies enhance operator awareness of the environment around working equipment and provide alerts to help keep people and assets safe.

- **Rear Vision Camera** – The standard rear vision camera enhances visibility behind the machine, helping the operator work confidently, at peak potential. A rear view and payload data is displayed on the multi-function monitor during reverse travel. An optional second display can be added to provide a dedicated rear view of the job site.

Owning Costs
Proven Best Investment.

Customer Support Agreements

A Customer Support Agreement (CSA) is an arrangement between you and your Cat dealer that helps you lower your total cost per ton. CSAs are flexible, allowing them to be tailored to your business needs. They can range from simple Preventive Maintenance Kits to elaborate Total Cost Performance Guarantees. Having a CSA with your Cat dealer enables more time for you to do what you do best – run your business.

Monitoring Systems

Monitoring product health is key to optimizing the life of an investment into a Cat Wheel Loader.

- **Cat Product Link** – Cat Product Link allows remote monitoring of equipment to improve overall fleet management effectiveness. Product Link is deeply integrated into machine systems. Events and diagnostic codes, as well as hours, fuel, idle time and other detailed information are transmitted to a secure web based application, VisionLink. VisionLink includes powerful tools to convey information to users and dealers, including mapping, working and idle time, fuel level and more.
- **S·O·S Services** – Helps manage component life and decrease machine downtime, increasing productivity and efficiency. Regular fluid sampling can help track what is going on inside your machine. Wear related problems are predictable and easily repairable. Maintenance can be done to accommodate your schedule, resulting in increased uptime and flexibility in maintenance repairs before failure.

Parts Availability

Caterpillar provides an unsurpassed level of personalized service to help you work more cost effectively and efficiently. By utilizing a worldwide parts network Cat dealers help minimize machine downtime and save money by delivering replacement parts within 24 hours.

Resale Value

Owning quality equipment is an important factor in maintaining resale value. Caterpillar is not only known for machines that are better built, but provides product and dealer support to maintain the reliability and durability of your machine.

Operating Costs

Save Time and Money by Working Smart.

Data from customer machines show Cat wheel loaders are the most fuel efficient machines in the industry. Several features contribute to this excellent fuel efficiency:

- **New M Series Stage IV Engine, Hydraulics, Transmission and Ride Control** – Deep system integration results in reduced emissions, more productivity, lower fuel consumption, without interrupting machine performance.
- **New Manual/Automatic Differential Locks** – Increase traction, reduce tire scuffing compared to other traction aids, further reducing your operating costs.
- **The intelligent ECO mode** optimizes engine torque and speed to further reduce fuel consumption.
- The adjustable **Automatic Idle Engine Shutdown System** significantly reduces idle time, overall operating hours and fuel consumption.
- **New External Caliper Disc Parking Brakes** – Easily accessible for maintenance.
- **Lock-up-Clutch Torque Converter and Shift Strategy** – Reduced torque interruption increases driveline efficiency, conserving fuel. Auto 1-5 transmission mode keeps engine rpm low, reducing fuel consumption while delivering optimal machine performance.
- **Performance Series Buckets** – Deliver faster fill times and better material retention, ultimately reducing cycle times while improving productivity and fuel efficiency.

Machine Configuration, Operator technique and job site layout can impact fuel consumption by as much as 30 percent. Select the correct linkage, guarding, work tool and tire type based on machine application.

Enabling Application Efficiency

- **Loading Bucket** – Load in first gear and keep engine rpm low. Raise and tilt bucket smoother, with Caterpillar's multi-function capability, and do not use a "pumping" motion. Avoid lift lever detent and use of transmission neutralizer.
  Use programmable kick-outs and automatic cylinder snubbing during repeated cycles.
- **Loading Truck or Hopper** – Do not raise the work tool any higher than necessary. Keep engine rpm low and unload in controlled manner.
- **Idle** – Set the parking brake to engage Engine Idle Management System to conserve fuel.
- **Job Site Layout** – Spot loading targets in the right position. Avoid traveling more than twice the machine length during short cycle loading. Reduce transport distance for load and carry cycles by optimizing job site layout.

Serviceable

Easy to Maintain. Easy to Service.

Engine Access

The Cat sloped “one-piece” tilting hood provides industry leading access to the engine. Its design has further been improved on all M Series wheel loaders to provide the best-in-class service access to engine, oil levels and coolant sight gauge.

Cooling System

The cooling system is readily accessible for clean out and maintenance. With six cooling fins per 25.4 mm and a perforated grill, most airborne debris entering the system passes through the cooler cores. The hydraulic and A/C cooler cores swing out providing easy access to both sides for cleaning. An access panel on the left side of the cooling package swings down to provide access to the back side of the engine coolant and Air-to-Air After Cooler (ATAAC). An optional variable pitch fan can automatically purge the cooler cores by periodically reversing the airflow when needed.

Service Centers

The electrical and hydraulic service centers provide grouped ground level access to numerous features, enhancing safety and convenience for your operators and service technicians, while reducing service time.

The electrical service center, located beneath the left platform, contains the maintenance free batteries, a fuse relay panel, main disconnect switch, ground level engine shutdown switch, hood tilt switch, and the jump start receptacle.

Hydraulic system components on the 950M and 962M are protected by full flow and kidney-loop filtration. A filter in the hydraulic tank return line filters all of the oil returning to the tank. There is also a case drain screen for additional protection and finally, a separate kidney-loop filter with a finer micron rating continuously filters smaller particles out of the system. This multilevel design ensures the hydraulic oil is clean and thoroughly protects the rest of the hydraulic system from contamination. A new thermal bypass valve has been added to improve hydraulic system warm-up.

The hydraulic service centers are now virtually identical for the M Series product line. This new consistent layout makes it easier for service technicians who work on a variety of M Series models.

Sustainable
Conserving Resources.

The 950M and 962M are designed to compliment your business plan, reduce emissions and minimize the consumption of natural resources.

- Improved fuel efficiency – less fuel consumed results in lower emissions.
- Machines are built with a 97% recyclability rate (ISO 16714) to conserve valuable natural resources and further enhance machine end of life value.
- Improved operator efficiency through enhanced visibility and reduced noise levels.
- Link technologies enable you to collect and analyze equipment and job site data so you can maximize productivity and reduce costs.
- Major components are rebuildable, eliminating waste and saving money by giving the machine and/or major components a second life – and even a third life.

Customer Support
Unmatched Support Makes the Difference.

Renowned Cat Dealer Support

- Your Cat dealer is ready to help you every step of the way. From new or used machine sales, to rental or rebuild options, your Cat dealer can provide an optimal solution to your business needs.
- Unsurpassed worldwide parts availability, trained technicians and customer support agreements maximize your machine uptime.
- Financing options are offered to meet a variety of customer needs.

950M/962M Wheel Loaders Specifications

Engine – 950M

Engine Model	Cat C7.1 ACERT	
Maximum Gross Power (2,100 rpm)		
SAE J1995	187 kW	254 hp (metric)
Maximum Gross Power (2,100 rpm)		
ISO 14396	186 kW	253 hp (metric)
Maximum Net Power (2,100 rpm)		
ISO 9249	171 kW	232 hp (metric)
Peak Gross Torque (1,300 rpm)		
ISO 14396	1231 N·m	
Maximum Net Torque (1,300 rpm)		
ISO 9249	1163 N·m	
Bore	105 mm	
Stroke	135 mm	
Displacement	7.01 L	

- Cat engine with ACERT Technology – meets Stage IV emission standards.
- The power ratings apply at the stated speed when tested under the reference conditions for the specified standards.
- The net power advertised is the power available at the flywheel when the engine is equipped with fan, alternator, air cleaner and aftertreatment.
- The gross power advertised is with the fan at maximum speed.

Buckets – 950M

Bucket Capacities	2.5-9.2 m^3

Weight – 950M

Operating Weight	19 269 kg

- Weight based on a machine configuration with Michelin 23.5R25 XHA2 L3 radial tires, full fluids, operator, standard counterweight, cold start, roading fenders, Product Link, manual diff lock/open axles (front/rear), power train guard, secondary steering, sound suppression and a 3.3 m^3 material handling bucket with BOCE.

Engine – 962M

Engine Model	Cat C7.1 ACERT	
Maximum Gross Power (2,100 rpm)		
SAE J1995	202 kW	275 hp (metric)
Maximum Gross Power (2,100 rpm)		
ISO 14396	201 kW	273 hp (metric)
Maximum Net Power (2,100 rpm)		
ISO 9249	186 kW	253 hp (metric)
Peak Gross Torque (1,350 rpm)		
ISO 14396	1245 N·m	
Maximum Net Torque (1,350 rpm)		
ISO 9249	1172 N·m	
Bore	105 mm	
Stroke	135 mm	
Displacement	7.01 L	

- Cat engine with ACERT Technology – meets Stage IV emission standards.
- The power ratings apply at the stated speed when tested under the reference conditions for the specified standards.
- The net power advertised is the power available at the flywheel when the engine is equipped with fan, alternator, air cleaner and aftertreatment.
- The gross power advertised is with the fan at maximum speed.

Buckets – 962M

Bucket Capacities	2.5-9.9 m^3

Weight – 962M

Operating Weight	20 296 kg

- Weight based on a machine configuration with Michelin 23.5R25 XHA2 L3 radial tires, full fluids, operator, standard counterweight, cold start, roading fenders, Product Link, manual diff lock/open axles (front/rear), power train guard, secondary steering, sound suppression and a 3.6 m^3 material handling bucket with BOCE.

Transmission

Forward 1	6.9 km/h
Forward 2	12 km/h
Forward 3	19.3 km/h
Forward 4	25.7 km/h
Forward 5	39.5 km/h
Reverse 1	6.9 km/h
Reverse 2	12 km/h
Reverse 3	25.7 km/h

- Maximum travel speed in standard vehicle with empty bucket and standard L3 tires with 787 mm roll radius.

Hydraulic System

Implement Pump Type	Variable axial piston	
Implement System		
Maximum Pump Output (2,150 rpm)	286 L/min	
Maximum Operating Pressure	29 300 kPa	
Optional 3rd/4th Function Maximum Flow	240 L/min	
Optional 3rd/4th Function Maximum Pressure	21 780 kPa	
Hydraulic Cycle Time with Rated Payload	**950M**	**962M**
Raise from Carry Position	5.1 Seconds	5.2 Seconds
Dump, at Maximum Raise	1.5 Seconds	1.5 Seconds
Lower, Empty, Float Down	2.3 Seconds	2.7 Seconds
Total	8.9 Seconds	9.4 Seconds

Brakes

Brakes	Brakes meet ISO 3450 standards

Axles

Front	Fixed
Rear	Oscillating ±13 degrees
Maximum Single-Wheel Rise and Fall	496 mm

Cab

ROPS/FOPS	ROPS/FOPS meet ISO 3471 and ISO 3449 Level II standards

Sound

The sound values indicated below are for specific operating conditions only. Machine and operator sound levels will vary at different engine and/or cooling fan speeds. Hearing protection may be needed when the machine is operated with a cabin that is not properly maintained, or when the doors and/or windows are open for extended periods or in a noisy environment.

Operator Sound Pressure Level (ISO 6396:2008)	69 dB(A)*
Exterior Sound Power Level (ISO 6395:2008) European Union Directive "2000/14/EC" as amended by "2005/88/EC."	104 dB(A)*
Exterior Sound Pressure Level (SAE J88:2013)	75 dB(A)**

*For a standard machine configuration, measured according to the procedures specified with the cooling fan speed set at 70% of maximum value.

**For a standard machine configuration, measured according to the procedures specified. The measurement was conducted under the following conditions: distance of 15 m, moving forward in second gear ratio with the cooling fan speed set at maximum value.

Service Refill Capacities

Fuel Tank	275 L
DEF Tank*	16 L
Cooling System	59 L
Crankcase	22 L
Transmission	43 L
Differentials and Final Drives – Front	43 L
Differentials and Final Drives – Rear	43 L
Hydraulic Tank	125 L

*Must meet the requirements outlined in ISO 22241-1.

Air Conditioning System

The air conditioning system on this machine contains the fluorinated greenhouse gas refrigerant R134a (Global Warming Potential = 1430). The system contains 1.6 kg of refrigerant which has a CO_2 equivalent of 2.288 metric tonnes.

950M Dimensions

All dimensions are approximate.

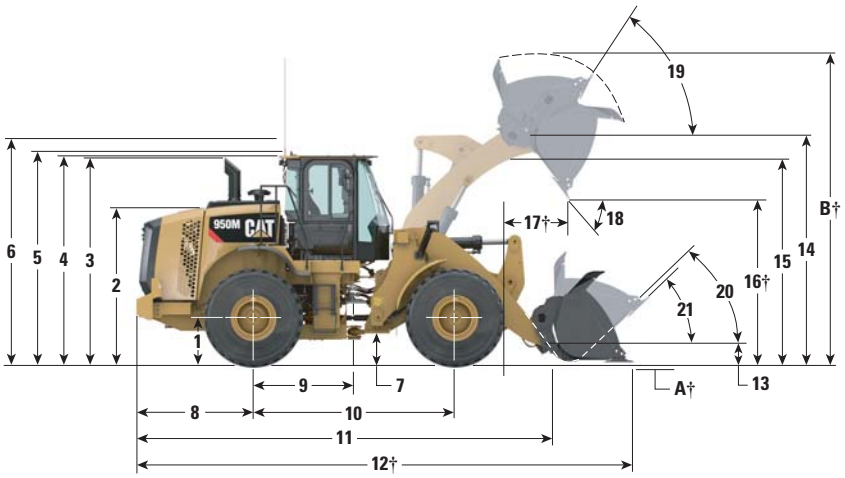

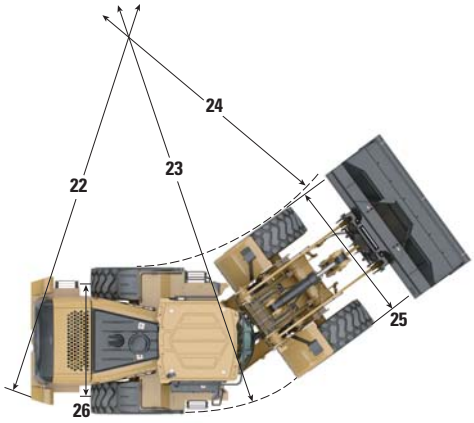

		Standard Lift with Standard Counterweight	Standard Lift with Auxiliary Counterweight	High Lift with Auxiliary Counterweight
1	Height to Axle Centerline	747 mm	747 mm	747 mm
2	Height to Top of Hood	2697 mm	2697 mm	2697 mm
3	Height to Top of Exhaust Pipe	3413 mm	3413 mm	3413 mm
4	Height to Top of ROPS	3451 mm	3451 mm	3451 mm
5	Height to Top of Product Link Antenna	3653 mm	3653 mm	3653 mm
6	Height to Top of Warning Beacon	3747 mm	3747 mm	3747 mm
7	Ground Clearance	367 mm	367 mm	—
8	Center Line of Rear Axle to Edge of Counterweight	1942 mm	2071 mm	2071 mm
9	Center Line of Rear Axle to Hitch	1675 mm	1675 mm	1675 mm
10	Wheelbase	3350 mm	3350 mm	3350 mm
11	Overall Length (without bucket)	6902 mm	7031 mm	7488 mm
12	Shipping Length (with bucket level on ground)*†	8242 mm	8371 mm	8824 mm
13	Hinge Pin Height at Carry Height	647 mm	647 mm	782 mm
14	Hinge Pin Height at Maximum Lift	4027 mm	4027 mm	4527 mm
15	Lift Arm Clearance at Maximum Lift	3280 mm	3280 mm	3634 mm
16	Dump Clearance at Maximum Lift and 45° Discharge*†	2789 mm	2789 mm	3295 mm
17	Reach at Maximum Lift and 45° Discharge*†	1378 mm	1378 mm	1413 mm
18	Dump Angle at Maximum Lift and Dump (on stops)*	47 degrees	47 degrees	44 degrees
19	Rack Back at Maximum Lift*	59 degrees	59 degrees	59 degrees
20	Rack Back at Carry Height*	49 degrees	49 degrees	49 degrees
21	Rack Back at Ground*	36 degrees	36 degrees	40 degrees
22	Clearance Circle (radius) to Counterweight	6023 mm	6023 mm	6023 mm
23	Clearance Circle (radius) to Outside of Tires	5985 mm	5985 mm	6001 mm
24	Clearance Circle (radius) to Inside of Tires	3219 mm	3219 mm	3219 mm
25	Width over Tires (unloaded)	2814 mm	2814 mm	2814 mm
	Width over Tires (loaded)	2822 mm	2822 mm	2822 mm
26	Tread Width	2140 mm	2140 mm	2140 mm

*With 3.3 m^3 pin on MH bucket with BOCE (see Operating Specifications tables for other buckets).

†Dimensions are listed in Operating Specification charts.

All height and tire related dimensions are with Michelin 23.5R25 XHA2 L3 radial tires (see Tire Option Chart for other tires).
"Width Over Tires" dimensions are over the bulge and include growth.

962M Dimensions

All dimensions are approximate.

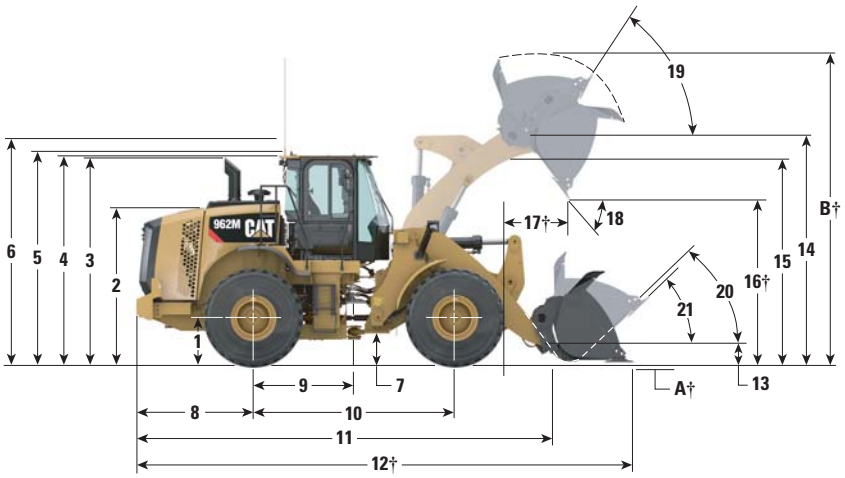

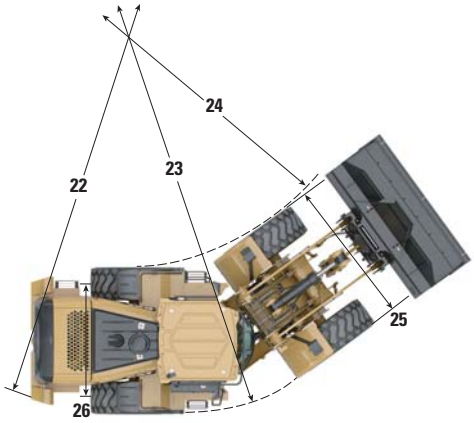

		Standard Lift with Standard Counterweight	Aggregate Handler	High Lift with Auxiliary Counterweight
1	Height to Axle Centerline	747 mm	747 mm	747 mm
2	Height to Top of Hood	2694 mm	2694 mm	2691 mm
3	Height to Top of Exhaust Pipe	3411 mm	3411 mm	3408 mm
4	Height to Top of ROPS	3447 mm	3447 mm	3444 mm
5	Height to Top of Product Link Antenna	3653 mm	3653 mm	3653 mm
6	Height to Top of Warning Beacon	3747 mm	3747 mm	3747 mm
7	Ground Clearance	364 mm	364 mm	361 mm
8	Center Line of Rear Axle to Edge of Counterweight	2147 mm	2186 mm	2186 mm
9	Center Line of Rear Axle to Hitch	1675 mm	1675 mm	1675 mm
10	Wheelbase	3350 mm	3350 mm	3350 mm
11	Overall Length (without bucket)	7227 mm	7266 mm	7598 mm
12	Shipping Length (with bucket level on ground)*†	8653 mm	8692 mm	9025 mm
13	Hinge Pin Height at Carry Height	669 mm	669 mm	779 mm
14	Hinge Pin Height at Maximum Lift	4235 mm	4235 mm	4524 mm
15	Lift Arm Clearance at Maximum Lift	3477 mm	3477 mm	3631 mm
16	Dump Clearance at Maximum Lift and 45° Discharge*†	2946 mm	2946 mm	3235 mm
17	Reach at Maximum Lift and 45° Discharge*†	1372 mm	1372 mm	1473 mm
18	Dump Angle at Maximum Lift and Dump (on stops)*	46 degrees	46 degrees	44 degrees
19	Rack Back at Maximum Lift*	59 degrees	59 degrees	59 degrees
20	Rack Back at Carry Height*	49 degrees	49 degrees	49 degrees
21	Rack Back at Ground*	37 degrees	37 degrees	37 degrees
22	Clearance Circle (radius) to Counterweight	6022 mm	6022 mm	6064 mm
23	Clearance Circle (radius) to Outside of Tires	5985 mm	5985 mm	5985 mm
24	Clearance Circle (radius) to Inside of Tires	3219 mm	3219 mm	3219 mm
25	Width over Tires (unloaded)	2821 mm	2821 mm	2821 mm
	Width over Tires (loaded)	2824 mm	2824 mm	2824 mm
26	Tread Width	2140 mm	2140 mm	2140 mm

*With 3.6 m^3 on MH bucket with BOCE (see Operating Specifications tables for other buckets).

†Dimensions are listed in Operating Specification charts.

All height and tire related dimensions are with Michelin 23.5R25 XHA2 L3 radial tires (see Tire Option Chart for other tires).
"Width Over Tires" dimensions are over the bulge and include growth.

950M/962M Wheel Loaders Specifications

950M Tire Options

Tire Brand	Michelin	Bridgestone	Goodyear	Bridgestone	Michelin	Michelin	Flexport™	Flexport
Tire Size	**23.5R25**	**23.5R25**	**23.5R25**	**23.5R25**	**750/65R25**	**23.5R25**	**23.5×25**	**23.5×25**
Tread Type	**L-3**	**L-3**	**L-3**	**L-3**	**L-3**	**L-5**	**—**	**—**
Tread Pattern	**XHA2**	**VMT**	**RT–3B**	**VJT**	**XLD**	**XLD D2**	**OTR**	**Smooth**
Width over Tires – Maximum (empty)*	2814 mm	2805 mm	2835 mm	2798 mm	2948 mm	2817 mm	2808 mm	2808 mm
Width over Tires – Maximum (loaded)*	2822 mm	2834 mm	2846 mm	2831 mm	2965 mm	2833 mm	2821 mm	2821 mm
Change in Vertical Dimensions (average of front and rear)	0 mm	–3 mm	–1 mm	–6 mm	–6 mm	28 mm	45 mm	45 mm
Change in Horizontal Reach	0 mm	6 mm	3 mm	6 mm	11 mm	–25 mm	–10 mm	–10 mm
Change in Clearance Circle to Outside of Tires	0 mm	12 mm	24 mm	9 mm	143 mm	5 mm	–1 mm	–1 mm
Change in Clearance Circle to Inside of Tires	0 mm	–12 mm	–24 mm	–9 mm	–143 mm	–5 mm	1 mm	1 mm
Change in Operating Weight (without Ballast)	0 kg	188 kg	127 kg	168 kg	801 kg	668 kg	3996 kg	4312 kg

*Width over bulge and includes tire growth.

Changes Specific to the 950M

Tire Brand	Michelin	Bridgestone	Goodyear	Bridgestone	Michelin	Michelin	Flexport	Flexport
Tire Size	**23.5R25**	**23.5R25**	**23.5R25**	**23.5R25**	**750/65R25**	**23.5R25**	**23.5×25**	**23.5×25**
Tread Type	**L-3**	**L-3**	**L-3**	**L-3**	**L-3**	**L-5**	**—**	**—**
Tread Pattern	**XHA2**	**VMT**	**RT–3B**	**VJT**	**XLD**	**XLD D2**	**OTR**	**Smooth**
Change in Static Tipping Load – Straight	0 kg	125 kg	85 kg	112 kg	534 kg	446 kg	2666 kg	2876 kg
Change in Static Tipping Load – Articulated	0 kg	109 kg	74 kg	98 kg	466 kg	389 kg	2324 kg	2508 kg

962M Tire Options

Tire Brand	Michelin	Bridgestone	Goodyear	Bridgestone	Michelin	Michelin	Flexport	Flexport
Tire Size	**23.5R25**	**23.5R25**	**23.5R25**	**23.5R25**	**750/65R25**	**23.5R25**	**23.5×25**	**23.5×25**
Tread Type	**L-3**	**L-3**	**L-3**	**L-3**	**L-3**	**L-5**	**—**	**—**
Tread Pattern	**XHA2**	**VMT**	**RT-3B**	**VJT**	**XLD**	**XLD D2**	**OTR**	**Smooth**
Width over Tires – Maximum (empty)*	2821 mm	2810 mm	2840 mm	2809 mm	2954 mm	2825 mm	2808 mm	2798 mm
Width over Tires – Maximum (loaded)*	2824 mm	2835 mm	2847 mm	2832 mm	2967 mm	2835 mm	2821 mm	2820 mm
Change in Vertical Dimensions (average of front and rear)	0 mm	–2 mm	1 mm	–6 mm	–6 mm	28 mm	47 mm	48 mm
Change in Horizontal Reach	0 mm	6 mm	3 mm	6 mm	11 mm	–25 mm	–10 mm	–10 mm
Change in Clearance Circle to Outside of Tires	0 mm	12 mm	23 mm	9 mm	143 mm	11 mm	–2 mm	–4 mm
Change in Clearance Circle to Inside of Tires	0 mm	–12 mm	–23 mm	–9 mm	–143 mm	–11 mm	2 mm	4 mm
Change in Operating Weight (without Ballast)	0 kg	188 kg	127 kg	168 kg	801 kg	668 kg	3996 kg	4312 kg

*Width over bulge and includes tire growth.

Changes Specific to the 962M

Tire Brand	Michelin	Bridgestone	Goodyear	Bridgestone	Michelin	Michelin	Flexport	Flexport
Tire Size	**23.5R25**	**23.5R25**	**23.5R25**	**23.5R25**	**750/65R25**	**23.5R25**	**23.5×25**	**23.5×25**
Tread Type	**L-3**	**L-3**	**L-3**	**L-3**	**L-3**	**L-5**	**—**	**—**
Tread Pattern	**XHA2**	**VMT**	**RT-3B**	**VJT**	**XLD**	**XLD D2**	**OTR**	**Smooth**
Change in Static Tipping Load – Straight	0 kg	119 kg	81 kg	106 kg	507 kg	446 kg	2529 kg	2729 kg
Change in Static Tipping Load – Articulated	0 kg	104 kg	70 kg	93 kg	442 kg	389 kg	2204 kg	2378 kg

950M Bucket Fill Factors and Selection Chart

The bucket size must be chosen based on the density of the material and on the expected fill factor. The new Cat Performance Series Buckets with longer floor, larger bucket opening, increased repository angle, rounded side boards and integrated spill guard, demonstrate fill factors significantly higher than previous generation or non Cat buckets. The actual volume handled by the machine is thus often larger than the rated capacity.

Loose Material		Material Density	Fill Factor (%)*
Earth/Clay		1500-1700 kg/m³	115
Sand and Gravel		1500-1700 kg/m³	115
Aggregate:	25-76 mm	1600-1700 kg/m³	110
	19 mm and smaller	1800 kg/m³	105
Rock:	76 mm and larger	1600 kg/m³	100

*As a % of ISO rated capacity.

Note: Fill Factors achieved will also depend on whether the product is washed or not washed.

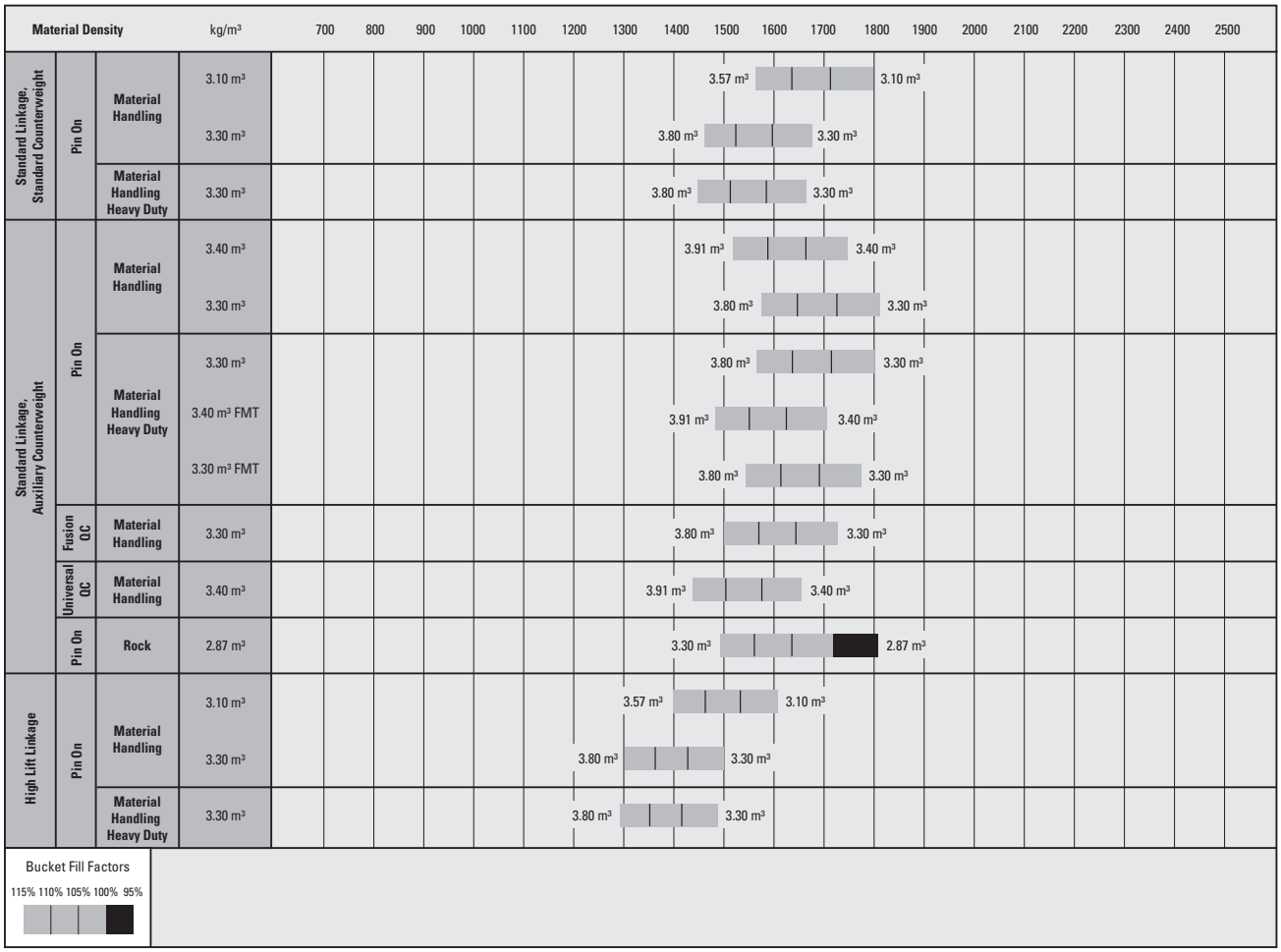

Note: All buckets are showing Bolt-On Edges.

950M Operating Specifications with Buckets

Linkage			Standard Linkage, Standard Counterweight						High Lift Linkage Change
Bucket Type			Material Handling – Pin On				Material Handling Heavy Duty – Pin On		
Edge Type			Bolt-On Cutting Edges	Teeth and Segments	Bolt-On Cutting Edges	Teeth and Segments	Bolt-On Cutting Edges	Teeth and Segments	
	Capacity – Rated	m^3	3.1	3.1	3.3	3.3	3.3	3.3	
	Capacity – Rated at 110% Fill Factor	m^3	3.41	3.41	3.63	3.63	3.63	3.63	
	Width	mm	2927	2994	2927	2994	2927	2994	
16†	Dump Clearance at Maximum Lift and 45° Discharge	mm	2821	2696	2789	2664	2789	2664	505
17†	Reach at Maximum Lift and 45° Discharge	mm	1346	1448	1378	1480	1378	1480	35
	Reach at Level Lift Arm and Bucket Level	mm	2686	2847	2731	2892	2731	2892	374
A†	Digging Depth	mm	90	90	90	90	90	90	4
12†	Overall Length	mm	8197	8370	8242	8415	8242	8415	583
B†	Overall Height with Bucket at Maximum Lift	mm	5483	5483	5527	5527	5536	5536	506
	Loader Clearance Circle with Bucket at Carry Position	mm	13 761	13 930	13 787	13 957	13 787	13 957	393
	Static Tipping Load, Straight (ISO)*	kg	12 624	12 484	12 533	12 393	12 458	12 315	–1277
	Static Tipping Load, Straight (Rigid Tire)*	kg	13 345	13 204	13 256	13 114	13 181	13 037	–1436
	Static Tipping Load, Articulated (ISO)*	kg	10 878	10 738	10 791	10 651	10 716	10 574	–1184
	Static Tipping Load, Articulated (Rigid Tire)*	kg	11 613	11 472	11 528	11 387	11 454	11 310	–1333
	Breakout Force	kN	181	180	174	173	174	172	–9
	Operating Weight*	kg	19 221	19 329	19 269	19 377	19 340	19 448	603

*Static tipping loads and operating weights shown are based on a machine configuration with Michelin 23.5R25 XHA2 L3 radial tires, full fluids, operator, standard counterweight, cold start, roading fenders, Product Link, manual diff lock/open axles (front/rear), power train guard, secondary steering and sound suppression.

(With Tire Deflection) Full compliance to ISO 14397-1 (2007) Sections 1 thru 6, which requires 2% verification between calculations and testing.

(No Tire Deflection) Compliance to ISO 14397-1 (2007) Sections 1 thru 5.

†Illustration shown with Dimension charts.

Other buckets are available and offerings vary by region. Consult your local Cat dealer for further details.

950M Operating Specifications with Buckets

Linkage			Standard Linkage, Auxiliary Counterweight					
Bucket Type			Material Handling – Pin On				Material Handling – Fusion QC	Material Handling – Universal QC
Edge Type			Bolt-On Cutting Edges	Teeth and Segments	Bolt-On Cutting Edges	Teeth and Segments	Bolt-On Cutting Edges	Bolt-On Cutting Edges
	Capacity – Rated	m^3	3.40	3.40	3.30	3.30	3.30	3.40
	Capacity – Rated at 110% Fill Factor	m^3	3.74	3.74	3.63	3.63	3.63	3.74
	Width	mm	2927	2994	2927	2994	2927	2927
16†	Dump Clearance at Maximum Lift and 45° Discharge	mm	2761	2636	2789	2664	2747	2675
17†	Reach at Maximum Lift and 45° Discharge	mm	1406	1508	1378	1480	1420	1492
	Reach at Level Lift Arm and Bucket Level	mm	2771	2932	2731	2892	2791	2893
A†	Digging Depth	mm	90	90	90	90	90	90
12†	Overall Length	mm	8411	8584	8371	8544	8431	8533
B†	Overall Height with Bucket at Maximum Lift	mm	5566	5566	5527	5527	5561	5627
	Loader Clearance Circle with Bucket at Carry Position	mm	13 811	13 981	13 787	13 957	13 815	13 868
	Static Tipping Load, Straight (ISO)*	kg	13 482	13 341	13 563	13 423	12 994	12 822
	Static Tipping Load, Straight (Rigid Tire)*	kg	14 278	14 136	14 358	14 216	13 778	13 594
	Static Tipping Load, Articulated (ISO)*	kg	11 564	11 423	11 641	11 501	11 101	10 960
	Static Tipping Load, Articulated (Rigid Tire)*	kg	12 380	12 238	12 455	12 314	11 904	11 753
	Breakout Force	kN	169	167	174	173	166	154
	Operating Weight*	kg	19 809	19 917	19 769	19 877	20 218	20 076

*Static tipping loads and operating weights shown are based on a machine configuration with Michelin 23.5R25 XHA2 L3 radial tires, full fluids, operator, auxiliary counterweight, cold start, roading fenders, Product Link, manual diff lock/open axles (front/rear), power train guard, secondary steering and sound suppression.

(With Tire Deflection) Full compliance to ISO 14397-1 (2007) Sections 1 thru 6, which requires 2% verification between calculations and testing.

(No Tire Deflection) Compliance to ISO 14397-1 (2007) Sections 1 thru 5.

†Illustration shown with Dimension charts.

Other buckets are available and offerings vary by region. Consult your local Cat dealer for further details.

950M Operating Specifications with Buckets

Linkage		Standard Linkage, Auxiliary Counterweight				
Bucket Type		Material Handling Heavy Duty – Pin On				Rock – Pin On
Edge Type		Bolt-On Cutting Edges	Teeth and Segments	Flush Mounted Teeth	Flush Mounted Teeth	Teeth and Segments
Capacity – Rated	m^3	3.30	3.30	3.40	3.30	2.87
Capacity – Rated at 110% Fill Factor	m^3	3.63	3.63	3.74	3.63	3.16
Width	mm	2927	2994	2994	2994	2969
16† Dump Clearance at Maximum Lift and 45° Discharge	mm	2789	2664	2598	2633	2695
17† Reach at Maximum Lift and 45° Discharge	mm	1378	1480	1588	1552	1636
Reach at Level Lift Arm and Bucket Level	mm	2731	2892	3015	2965	2950
A† Digging Depth	mm	90	90	63	63	93
12† Overall Length	mm	8371	8544	8645	8595	8630
B† Overall Height with Bucket at Maximum Lift	mm	5536	5536	5621	5574	5442
Loader Clearance Circle with Bucket at Carry Position	mm	13 787	13 957	14 009	13 978	14 003
Static Tipping Load, Straight (ISO)*	kg	13 488	13 345	13 230	13 344	14 059
Static Tipping Load, Straight (Rigid Tire)*	kg	14 283	14 139	14 035	14 146	14 900
Static Tipping Load, Articulated (ISO)*	kg	11 566	11 424	11 302	11 411	12 050
Static Tipping Load, Articulated (Rigid Tire)*	kg	12 381	12 236	12 126	12 233	12 911
Breakout Force	kN	174	172	171	179	172
Operating Weight*	kg	19 840	19 948	20 109	20 049	20 517

*Static tipping loads and operating weights shown are based on a machine configuration with Michelin 23.5R25 XHA2 L3 radial tires, full fluids, operator, auxiliary counterweight, cold start, roading fenders, Product Link, manual diff lock/open axles (front/rear), power train guard, secondary steering and sound suppression.

(With Tire Deflection) Full compliance to ISO 14397-1 (2007) Sections 1 thru 6, which requires 2% verification between calculations and testing.

(No Tire Deflection) Compliance to ISO 14397-1 (2007) Sections 1 thru 5.

†Illustration shown with Dimension charts.

Other buckets are available and offerings vary by region. Consult your local Cat dealer for further details.

962M Bucket Fill Factors and Selection Chart

The bucket size must be chosen based on the density of the material and on the expected fill factor. The new Cat Performance Series Buckets with longer floor, larger bucket opening, increased repository angle, rounded side boards and integrated spill guard, demonstrate fill factors significantly higher than previous generation or non Cat buckets. The actual volume handled by the machine is thus often larger than the rated capacity.

Loose Material		Material Density	Fill Factor (%)*
Earth/Clay		1500-1700 kg/m³	115
Sand and Gravel		1500-1700 kg/m³	115
Aggregate:	25-76 mm	1600-1700 kg/m³	110
	19 mm and smaller	1800 kg/m³	105
Rock:	76 mm and larger	1600 kg/m³	100

*As a % of ISO rated capacity.

Note: Fill Factors achieved will also depend on whether the product is washed or not washed.

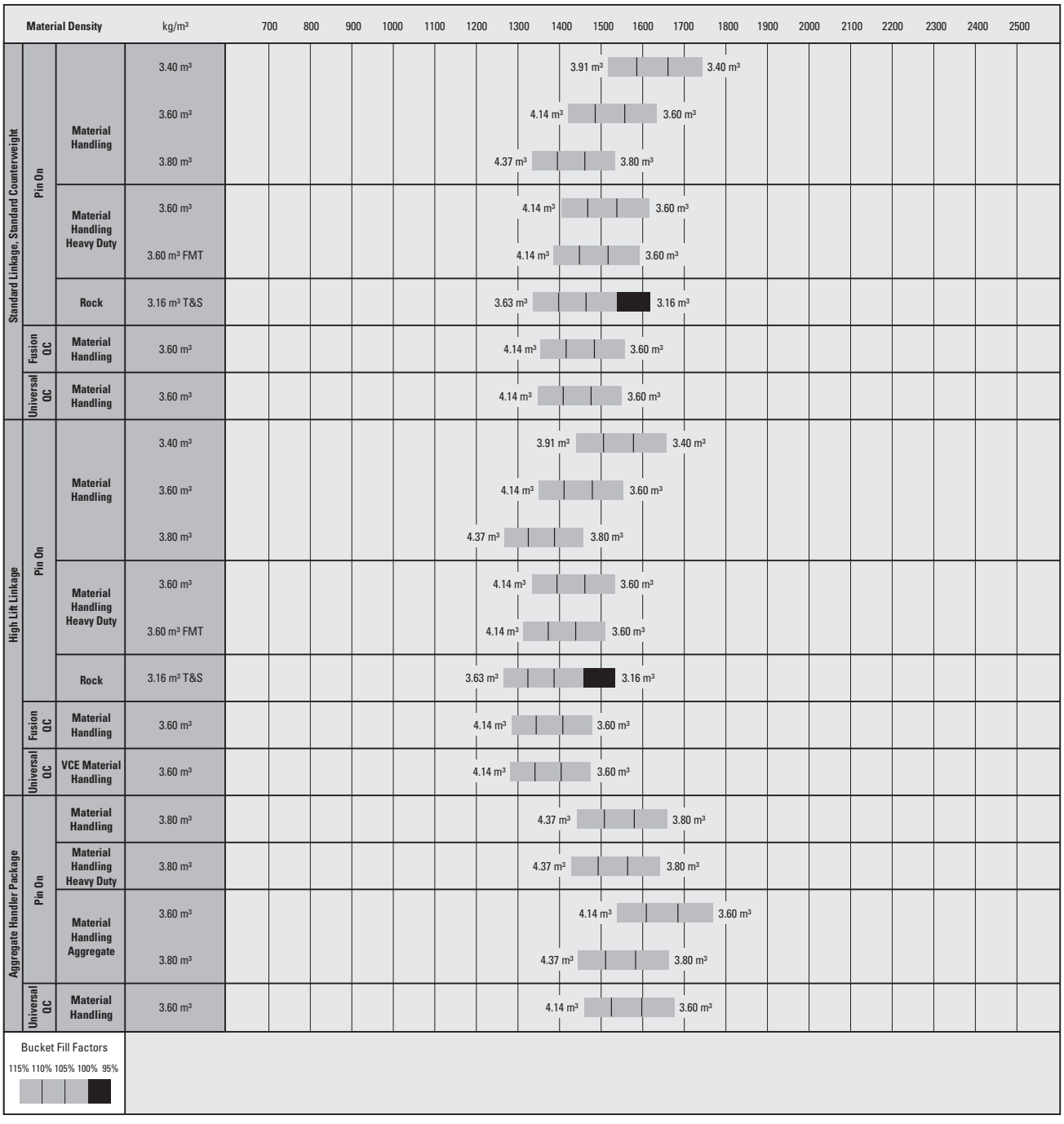

Note: All buckets are showing Bolt-On Edges.

962M Operating Specifications with Buckets

Linkage			Standard Linkage, Standard Counterweight						High Lift Linkage Change
Bucket Type			Material Handling – Pin On				Material Handling – Fusion QC	Material Handling – Universal QC	
Edge Type			Bolt-On Cutting Edges	Teeth and Segments	Bolt-On Cutting Edges	Teeth and Segments	Bolt-On Cutting Edges	Bolt-On Cutting Edges	
	Capacity – Rated	m^3	3.40	3.40	3.60	3.60	3.60	3.60	
	Capacity – Rated at 110% Fill Factor	m^3	3.74	3.74	3.96	3.96	3.96	3.96	
	Width	mm	2927	2994	2927	2994	2927	2927	
16†	Dump Clearance at Maximum Lift and 45° Discharge	mm	2978	2852	2946	2821	2904	2860	288
17†	Reach at Maximum Lift and 45° Discharge	mm	1340	1442	1372	1474	1414	1458	101
	Reach at Level Lift Arm and Bucket Level	mm	2869	3030	2914	3075	2974	3036	277
A†	Digging Depth	mm	88	88	88	88	88	89	5
12†	Overall Length	mm	8608	8780	8653	8825	8713	8775	372
B†	Overall Height with Bucket at Maximum Lift	mm	5783	5783	5831	5831	5860	5888	289
	Loader Clearance Circle with Bucket at Carry Position	mm	13 909	14 080	13 936	14 108	13 966	13 997	308
	Static Tipping Load, Straight (ISO)*	kg	13 477	13 337	13 383	13 243	12 828	12 741	–630
	Static Tipping Load, Straight (Rigid Tire)*	kg	14 201	14 060	14 109	13 967	13 544	13 445	–722
	Static Tipping Load, Articulated (ISO)*	kg	11 533	11 393	11 445	11 304	10 917	10 859	–611
	Static Tipping Load, Articulated (Rigid Tire)*	kg	12 278	12 137	12 192	12 050	11 655	11 585	–694
	Breakout Force	kN	183	182	177	176	169	162	–1
	Operating Weight*	kg	20 252	20 360	20 296	20 404	20 739	20 551	593

*Static tipping loads and operating weights shown are based on a machine configuration with Michelin 23.5R25 XHA2 L3 radial tires, full fluids, operator, standard counterweight, cold start, roading fenders, Product Link, manual diff lock/open axles (front/rear), power train guard, secondary steering and sound suppression.

(With Tire Deflection) Full compliance to ISO 14397-1 (2007) Sections 1 thru 6, which requires 2% verification between calculations and testing.

(No Tire Deflection) Compliance to ISO 14397-1 (2007) Sections 1 thru 5.

†Illustration shown with Dimension charts.

Other buckets are available and offerings vary by region. Consult your local Cat dealer for further details.

962M Operating Specifications with Buckets

Linkage			Standard Linkage, Standard Counterweight					High Lift Linkage Change
Bucket Type			Material Handling Heavy Duty – Pin On			Material Handling – Pin On	Rock – Pin On	
Edge Type			Bolt-On Cutting Edges	Teeth and Segments	Flush Mounted Teeth	Bolt-On Cutting Edges	Teeth and Segments	
	Capacity – Rated	m^3	3.60	3.60	3.60	3.80	3.16	
	Capacity – Rated at 110% Fill Factor	m^3	3.96	3.96	3.96	4.18	3.48	
	Width	mm	2927	2994	2994	2927	2969	
16†	Dump Clearance at Maximum Lift and 45° Discharge	mm	2943	2817	2783	2910	2853	288
17†	Reach at Maximum Lift and 45° Discharge	mm	1375	1477	1554	1408	1604	101
	Reach at Level Lift Arm and Bucket Level	mm	2919	3080	3158	2965	3117	277
A†	Digging Depth	mm	88	88	61	88	91	5
12†	Overall Length	mm	8658	8830	8888	8704	8894	372
B†	Overall Height with Bucket at Maximum Lift	mm	5837	5837	5884	5879	5730	289
	Loader Clearance Circle with Bucket at Carry Position	mm	13 939	14 111	14 137	13 967	14 145	308
	Static Tipping Load, Straight (ISO)*	kg	13 251	13 108	13 112	13 275	13 881	–630
	Static Tipping Load, Straight (Rigid Tire)*	kg	13 976	13 832	13 844	14 002	14 650	–722
	Static Tipping Load, Articulated (ISO)*	kg	11 313	11 170	11 164	11 342	11 855	–611
	Static Tipping Load, Articulated (Rigid Tire)*	kg	12 060	11 916	11 918	12 091	12 646	–694
	Breakout Force	kN	176	175	180	170	177	–1
	Operating Weight*	kg	20 412	20 520	20 607	20 350	21 039	593

*Static tipping loads and operating weights shown are based on a machine configuration with Michelin 23.5R25 XHA2 L3 radial tires, full fluids, operator, standard counterweight, cold start, roading fenders, Product Link, manual diff lock/open axles (front/rear), power train guard, secondary steering and sound suppression.

(With Tire Deflection) Full compliance to ISO 14397-1 (2007) Sections 1 thru 6, which requires 2% verification between calculations and testing.

(No Tire Deflection) Compliance to ISO 14397-1 (2007) Sections 1 thru 5.

†Illustration shown with Dimension charts.

Other buckets are available and offerings vary by region. Consult your local Cat dealer for further details.

962M Operating Specifications with Buckets – Aggregate Handler

Package			Aggregate Handler**				
Bucket Type			Material Handling – Pin On	Material Handling Heavy Duty – Pin On	Material Handling Aggregate – Pin On		Material Handling – Universal QC
Edge Type			Bolt-On Cutting Edges	Bolt-On Cutting Edges	Bolt-On Cutting Edges	Bolt-On Cutting Edges	Bolt-On Cutting Edges
	Capacity – Rated	m^3	3.80	3.80	3.60	3.80	3.60
	Capacity – Rated at 110% Fill Factor	m^3	4.18	4.18	3.96	4.18	3.96
	Width	mm	2927	2927	2914	2914	2927
16†	Dump Clearance at Maximum Lift and 45° Discharge	mm	2910	2910	2964	2928	2860
17†	Reach at Maximum Lift and 45° Discharge	mm	1408	1408	1354	1390	1458
	Reach at Level Lift Arm and Bucket Level	mm	2965	2965	2889	2940	3036
A†	Digging Depth	mm	88	88	88	88	89
12†	Overall Length	mm	8743	8743	8667	8718	8814
B†	Overall Height with Bucket at Maximum Lift	mm	5879	5866	5816	5868	5888
	Loader Clearance Circle with Bucket at Carry Position	mm	13 967	13 967	13 909	13 940	13 997
	Static Tipping Load, Straight (ISO)*	kg	14 362	14 240	14 497	14 385	13 800
	Static Tipping Load, Straight (Rigid Tire)*	kg	15 165	15 042	15 297	15 188	14 576
	Static Tipping Load, Articulated (ISO)*	kg	12 239	12 116	12 367	12 262	11 732
	Static Tipping Load, Articulated (Rigid Tire)*	kg	13 070	12 947	13 196	13 093	12 537
	Breakout Force	kN	170	170	181	174	162
	Operating Weight*	kg	20 919	21 030	20 848	20 901	21 120

*Static tipping loads and operating weights shown are based on a machine configuration with Michelin 23.5R25 XHA2 L3 radial tires, full fluids, operator, Aggregate Handler counterweight, cold start, roading fenders, Product Link, manual diff lock/open axles (front/rear), power train guard, secondary steering and sound suppression.

**Aggregate Handler configuration is not compatible with teeth and segments, tips, rock buckets, high lift, L5 tires.

(With Tire Deflection) Full compliance to ISO 14397-1 (2007) Sections 1 thru 6, which requires 2% verification between calculations and testing.

(No Tire Deflection) Compliance to ISO 14397-1 (2007) Sections 1 thru 5.

†Illustration shown with Dimension charts.

Other buckets are available and offerings vary by region. Consult your local Cat dealer for further details.

Standard Equipment

Standard equipment may vary. Consult your Cat dealer for details.

OPERATOR ENVIRONMENT

- Cab, pressurized and sound suppressed (ROPS/FOPS)
- Viscous mounts
- Multi-function 18 cm color LCD touch-screen display for rear vision camera image display (reverse travel activated) and machine status, setting and health parameters
- EH controls, SAL (single axis lever) lift and tilt function
- Steering, steering wheel
- Radio ready (entertainment) includes antenna, speakers and converter (12V, 10-amp)
- Air conditioner, heater, and defroster (auto temp and fan)
- EH parking brake
- Beverage holders (2) with storage compartment for cell phone/MP3 player
- Bucket/work tool function lockout
- Coat hook (2)
- Cab air filter
- Ergonomic cab access ladders and handrails
- Horn, electric
- Light, two dome (cab)
- Mirrors, rearview external with integrated spot mirrors
- Post mounted membrane 16 switch keypad
- 2 receptacles, 12V
- Seat, Cat Comfort (cloth) air suspension
- Seat belt, 51 mm retractable, with indicator
- Sun visor, front
- Wet-arm wipers/washers front and rear, intermittent front wiper
- Window, sliding (left and right sides)
- Cab tie-off

COMPUTERIZED MONITORING SYSTEM

- With following gauges:
  - Speedometer/tachometer
  - Digital gear range indicator
  - Diesel Exhaust Fluid (DEF) level
  - Temperature: engine coolant, hydraulic oil, transmission oil
  - Fuel level
- With following warning indicators:
  - Temperature: axle oil, engine intake manifold
  - Pressure: engine oil, fuel pressure hi/low, primary steering oil, service brake oil
  - Battery voltage hi/low
  - Engine air filter restriction
  - Hydraulic oil filter restriction
  - Hydraulic oil low
  - Parking brake
  - DEF low level
  - Transmission filter bypass

ELECTRICAL AND LIGHTING

- Batteries (2), maintenance free 1,400 CCA
- Ignition key; start/stop switch
- Starter, electric, heavy duty
- Starting and charging system (24V)
- Lighting system:
  - Four halogen work lights (cab mounted)
  - Two LED stop, turn, tail lights
  - Two halogen roading lights (with signals)
  - Two halogen rear vision lights (hood mounted)
- Alarm, back-up
- Alternator, 145-amp brushed
- Main disconnect switch
- Receptacle start (cables not included)
- Secondary steering

CAT CONNECT TECHNOLOGIES

- Link technologies: Product Link
- Detect technologies: rear vision camera

POWER TRAIN

- Engine, Cat C7.1 ACERT – meets Stage IV emission standards
- Cat Clean Emissions Module (CEM) with Diesel Particulate Filter (DPF) and remote Diesel Exhaust Fluid (DEF) tank and pump
- Fuel priming pump (electric)
- Fuel/water separator
- Precleaner, engine air intake
- Economy Mode (selectable)
- Transmission, automatic countershaft power shift (5F/3R)
- Torque converter, locking clutch with free wheel stator
- Switch, transmission neutralizer lockout
- Axles, manually actuated differential lock front axle, open differential rear axle
- Axles, ecology drains
- Brakes, full hydraulic enclosed wet-disc with Integrated Braking System (IBS)
- Brake wear indicators
- Parking brake, disc and caliper
- Fan, radiator, electronically controlled, hydraulically driven, temperature sensing, on demand
- Radiator, high debris with wide fin spacing

LINKAGE

- Linkage, optimized Z-bar, cast crosstube/ tilt lever
- Kickout, lift and tilt, automatic (adjustable in cab)

HYDRAULICS

- Hydraulic system, load sensing
- Steering, load sensing
- Ride control, 2V
- Remote diagnostic pressure taps
- Hoses, Cat XT™
- Couplings, Cat O-ring face seal
- Hydraulic oil cooler (swing out)
- Oil sampling valves

FLUIDS

- Premixed extended life coolant with freeze protection to –34° C

OTHER STANDARD EQUIPMENT

- Hood, non-metallic power tilting
- Service centers (electrical and hydraulic)
- Auto idle shutdown
- Fenders with mud-flap/rear with extension
- Ecology drains for engine, transmission, and hydraulics
- Grill, airborne debris
- Filters: fuel, engine air, engine oil, hydraulic oil, transmission
- Fuel cooler
- Grease zerks
- Hitch, drawbar with pin
- Precleaner rain cap
- Sight gauges: engine coolant, hydraulic oil, and transmission oil level
- Toolbox
- Vandalism protection caplocks

Optional Equipment

Optional equipment may vary. Consult your Cat dealer for details.

OPERATOR ENVIRONMENT

- Door, remote opening system
- Cover, HVAC metallic
- EH controls, SAL 3rd function
  - Additional roller switch for 4th function
- EH controls, joystick lift and tilt
  - Additional integrated roller switches for 3rd and 4th functions
- Filter, carbon fresh air
- Mirrors, heated rearview external with integrated spot mirrors
- Precleaner, HVAC
- Precleaner, HVAC (RESPA)
- Radio, AM/FM/CD/USB/MP3 Bluetooth
- Radio, CB ready
- Seat, heated air suspension
- Seat belt, 4 point harness, with indicator
- Steering, EH joystick, speed sensing with force feedback
- Roof, metallic
- Sun visor, rear
- Windows, rubber mounted
- Windows, with front guard
- Windows, with full guards front, rear and sides
- Full time rear vision display Work Area Vision System (WAVS)

ELECTRICAL AND LIGHTING

- Four additional halogen cab mounted work lights or;
- Four additional HID cab mounted work lights
- Forward roading lights with LED turn signal
- Warning amber strobe beacon
- Reversing strobes
- Speed limiter 20 km/h

STARTERS, BATTERIES, AND ALTERNATORS

- Cold start – 240V

CAT CONNECT TECHNOLOGIES

- Link technologies: VIMS™
- Payload technologies:
  - Aggregate Autodig
  - Cat Production Measurement
  - Printer, Cat Production Measurement
- Detect technologies: dedicated display for rear vision camera, full-time activation
- Machine Security System

POWER TRAIN

- Axles
  - Automatic front/rear differential locks
  - Axle oil cooler
  - Seal guards
- Fan, VPF (variable pitch fan), automatic and manual control
- Radiator, high ambient capability with smaller fan spacing

LINKAGE

- High lift
- Forestry
- Quick coupler ready
- Autolube

WORK TOOLS

- Performance Series buckets
- Fusion quick coupler, ISO coupler
- Forks, pallet
- Forks, logging

HYDRAULICS

- 3rd function with Ride Control
  - Standard linkage
  - High lift linkage
  - Forestry linkage
- 4th function with Ride Control
  - Standard linkage
  - High lift linkage
  - Forestry linkage

FLUIDS

- Premixed extended life coolant with freeze protection to –50° C
- Bio-degradable oil, Cat HYDO™

OTHER OPTIONAL EQUIPMENT

- Fenders, roading
- Guard, power train
- Precleaner, turbine
- Precleaner, trash
- Platform, window washing
- Cold weather package
  - Transmission filter bypass
  - Fan pump bypass
  - Jacket water or engine block heater
  - Ether aid ready

OTHER OPTIONAL CONFIGURATIONS

- Aggregate Handler (962M only; 950M offers an auxiliary counterweight but is not restricted as outlined for an aggregate handler)
- Industrial and Waste Handler
- Forestry

Notes

Notes

For more complete information on Cat products, dealer services, and industry solutions, visit us on the web at **www.cat.com**

AEHQ7757-01 (02-2017)
Replaces AEHQ7757

© 2017 Caterpillar
All rights reserved

Materials and specifications are subject to change without notice. Featured machines in photos may include additional equipment. See your Cat dealer for available options.

CAT, CATERPILLAR, SAFETY.CAT.COM, their respective logos, “Caterpillar Yellow” and the “Power Edge” trade dress, as well as corporate and product identity used herein, are trademarks of Caterpillar and may not be used without permission.

VisionLink is a trademark of Trimble Navigation Limited, registered in the United States and in other countries.